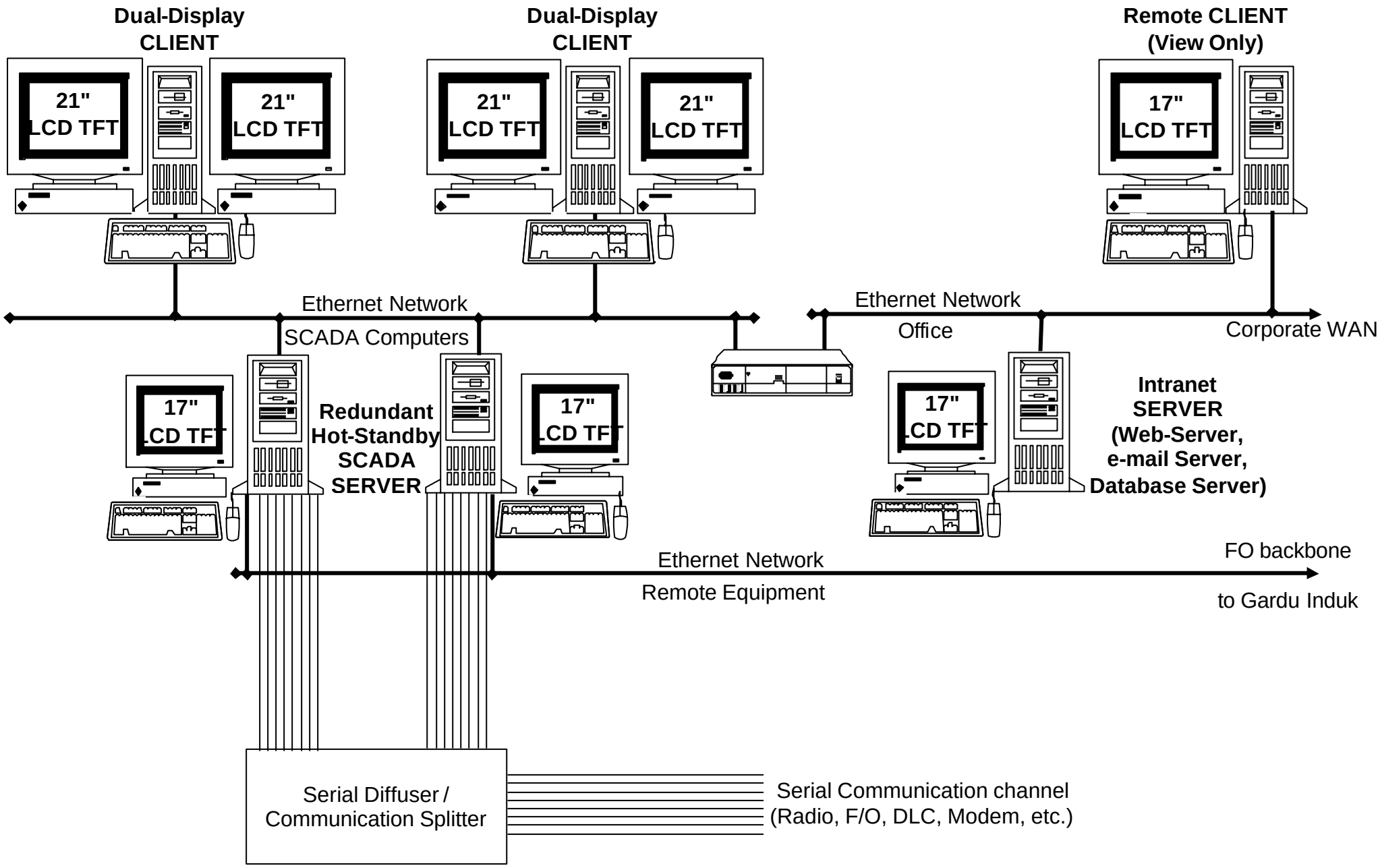
Dual-Display
CLIENT
21"
LCD TFT
21"
LCD TFT
Dual-Display
CLIENT
21"
LCD TFT
21"
LCD TFT
Remote CLIENT
(View Only)
17"
LCD TFT
Ethernet Network
SCADA Computers
Ethernet Network
Office
Corporate WAN
17"
LCD TFT
Redundant
Hot-Standby
SCADA
SERVER
17"
LCD TFT
17"
LCD TFT
Intranet
SERVER
(Web-Server,
e-mail Server,
Database Server)
Ethernet Network
Remote Equipment
FO backbone
to Gardu Induk
Serial Diffuser /
Communication Splitter
Serial Communication channel
(Radio, F/O, DLC, Modem, etc.)